NOTES: (B 3)

1. AFFIX CM2987-5 ID TAG NEAR PLUG.
2. DEUTSCH CO.
   BANNING, CA.
3. RAYCHEM CORPORATION
   MENLO PARK, CA.

REVISIONS				
SHEET	REV	DESCRIPTION	DATE	APPROVED
	A	BY REVISION: 1)REF PF005: PIN C WAS PIN D PIN D WAS PIN C EFF: EC 34158 WO XL-0538	07/29/96 SEA	
	B	BY REVISION: 1)ADDED CONNECTOR PF302 2)ADDED 20GA WIRES: EPF005-APF302 AND FPF005-BPF302 3)ID TAG P/N WAS CM2987-1 EFF: EC 34158 WO XL-1094	02/11/97 SEA	

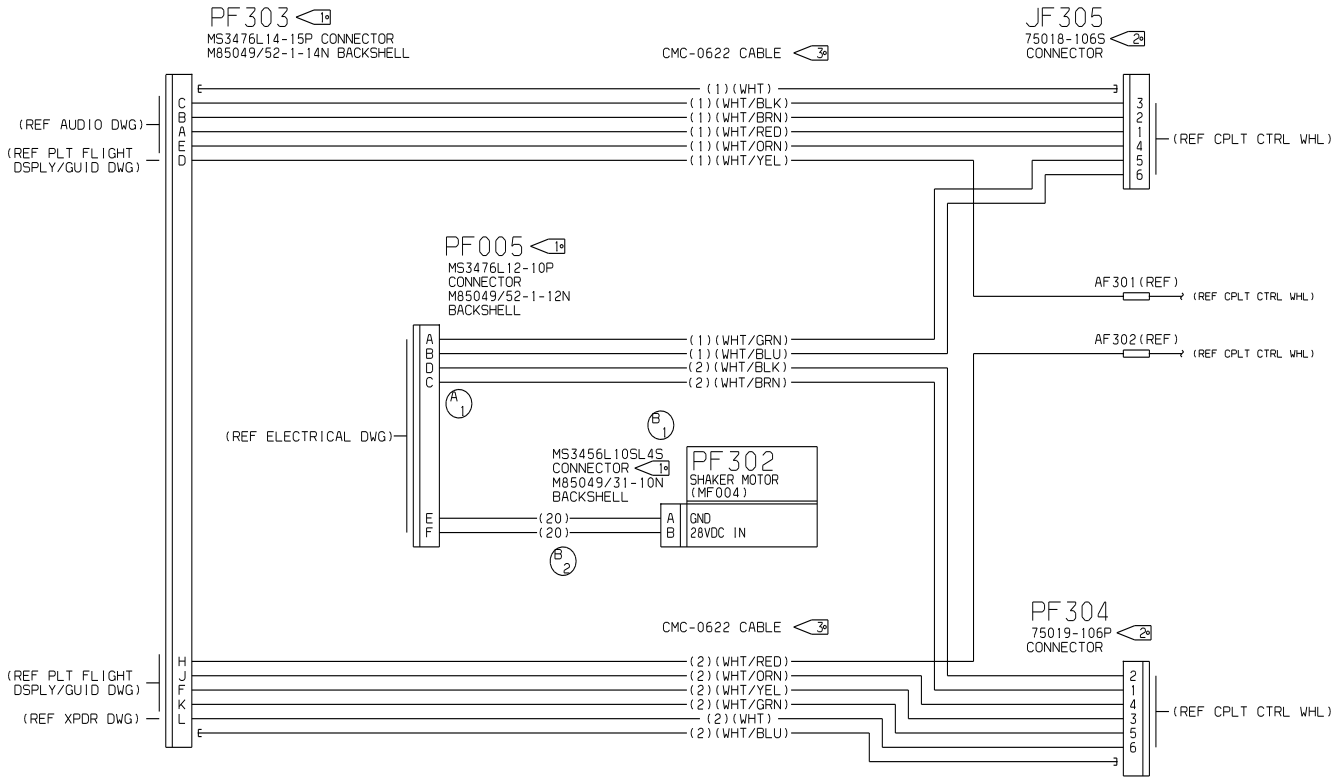

DATE 02/07/96	CESSNA AIRCRAFT COMPANY AIRCRAFT DIVISION P.O. BOX 7704 WICHITA, KANSAS 67277	
DRAWN ROBERT SCOTT		
GROUP	CABLE ASSY- COPILOT'S CONTROL COLUMN	
CHECK		
SECT		
PROJ		
M.E.		
OTHER SEE SIG. SHEET		
FABRICATE PER CES2606	SIZE F / FSCM NO. 71379	DWG NO. ******
PROCESS PER XXXXXXXXXXXXX		
WIRE TERMINATION PER CES2716	SCALE:	SHEET 1 OF 1

SH B
DWG NO. ******
EC 34158